DIMENSIONS

C30R-3

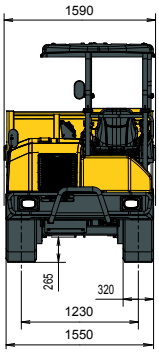

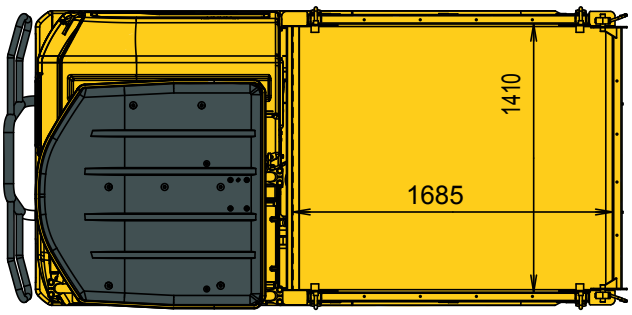

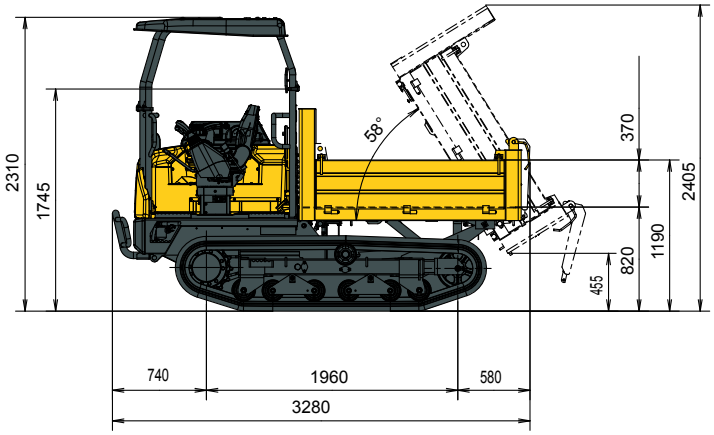

C30R-3TV

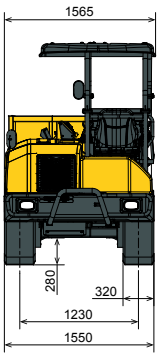

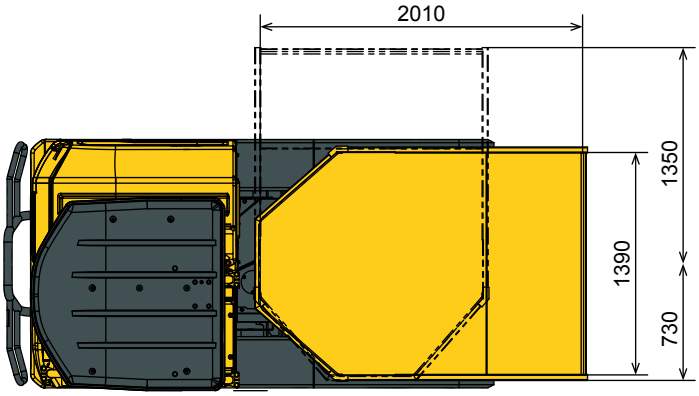

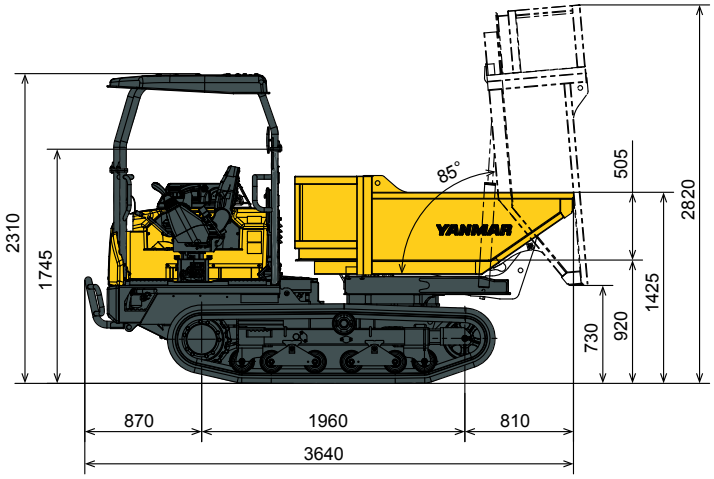

MAINTENANCE FREQUENCY

[Change engine oil and filter: **50 hours (1st) / 500 hours (2nd)**] [Change fuel filter: **500 hours**] [Change hydraulic oil filter: **1000 hours**] [Change hydraulic oil return filter: **50 hours (1st) / 500 hours (2nd)**] [Change cooling fluid: **2000 hours**]

SPECIFICATIONS

[WEIGHT +/- 2% (EN STANDARDS)]

	C30R-3	C30R-3TV
Operating weight	2 650 kg	2 865 kg
Transport weight	2 575 kg	2 790 kg
Payload	2 500 kg	2 500 kg

[ENGINE]

Type	4TNV88C-KFW (Common Rail + DPF)
Fuel	Diesel
Gross power	34,3 kW (at 2 800 rpm)
Net power	32,5 kW (at 2 800 rpm)
Displacement	2,189 l
Maximum torque	134.5 - 146.2 N.m (at 1820 rpm)
Cooling	Water cooling
Starter	12 V - 1.7 kW
Battery	12 V - 72 Ah
Alternator	12 V - 55 A

[TRANSMISSION]

Type	HST
2 piston pumps with variable flow	2 x 61,6 l/min
Max pressure	350 bar

[PERFORMANCE]

Max. travelling speed (low / high)	5.7 / 11 km/h
Gradability	30°
Noise level (2000/14/CE & 2005/88/CE)	Lwag = 98 dBA ; Lpag = 86 dBA

[DUMPING SYSTEM]

	C30R-3	C30R-3TV
Dumping angle	58°	85°
Vessel dimensions (L x w x h)	1 685 x 1 410 x 370 mm	2 010 x 1 390 x 505 mm
Dumping mechanism	3 sides	180 ° dumping
Dump vessel capacity (struck / heaped)	0,88 / 1,24 m^3	1,13 / 1,50 m^3
Dump clearance	455 mm	730 mm

[UNDERCARRIAGE]

	C30R-3	C30R-3TV
Track width	320 mm	320 mm
Ground clearance	265 mm	280 mm
Number of top rollers	1	1
Number of bottom rollers	6	6
Track tensioning system	Hydraulic adjuster	Hydraulic adjuster
Ground pressure (unloaded / loaded)	0,28 / 0,55 kgf/cm^2	0,30 / 0,57 kgf/cm^2

[CAPACITIES]

Hydraulic tank	28 l
Hydraulic circuit	38 l
Fuel tank	58 l